NITTAN

CONFORMITY
EN 54 - 2 1997
UNI EN 54 - 2 - 1999
CONTROL PANELS

CE

Remote repeaters for FX series analogue-addressable panels

FX/RP10 and FX/RP20

TECHNICAL MANUAL

FOREWORD

FOR THE INSTALLER:

Please follow carefully the specifications relative to electric and security systems realization further to the manufacturer's prescriptions indicated in the manual provided.
Provide the user the necessary indication for use and system's limitations, specifying that there exist precise specifications and different safety performances levels that should be proportioned to the user needs. Have the user view the directions indicated in this document.

FOR THE USER:

Periodically check carefully the system functionality making sure all enabling and disabling operations were made correctly.
Have skilled personnel make the periodic system's maintenance. Contact the installer to verify correct system operation in case its conditions have changed (e.g.: variations in the areas to protect due to extension, change of the access modes, etc…)

.....

This device has been projected, assembled and tested with the maximum care, adopting control procedures in accordance with the laws in force. The full correspondence to the functional characteristics is given exclusively when it is used for the purpose it was projected for, which is as follows:

Remote repeaters for FX series analogue-addressable panels

Any use other than the one mentioned above has not been forecasted and therefore it is not possible to guarantee its correct operativeness.
The manufacturing process is carefully controlled in order to prevent defaults and bad functioning. Nevertheless, an extremely low percentage of the components used is subjected to faults just as any other electronic or mechanic product. As this item is meant to protect both property and people, we invite the user to proportion the level of protection that the system offers to the actual risk (also taking into account the possibility that the system was operated in a degraded manner because of faults and the like), as well reminding that there are precise laws for the design and assemblage of the systems destinated to these kind of applications.

The system's operator is hereby advised to see regularly to the periodic maintenance of the system, at least in accordance with the provisions of current legislation, as well as to carry out checks on the correct running of said system on as regular a basis as the risk involved requires, with particular reference to the control unit, sensors, sounders, dialler(s) and any other device connected. The user must let the installer know how well the system seems to be operating, based on the results of periodic checks, without delay.

Design, installation and servicing of systems which include this product, should be made by skilled staff with the necessary knowledge to operate in safe conditions in order to prevent accidents. These systems' installation must be made in accordance with the laws in force. Some equipment's inner parts are connected to electric main and therefore electrocution may occur if servicing was made before switching off the main and emergency power. Some products incorporate rechargeable or non rechargeable batteries as emergency power supply. Their wrong connection may damage the product, properties and the operator's safety (burst and fire).

Your Dealer:

1. GENERALS

FX/RP10 and FX/RP20 repeaters are used to repeat, from a remote position, the operating status of the panel they are connected to: FX/50, FX/20 and FX10 (suitable interface board required with FX10).

The front panel features colour LED indicators and an LCD display for the visualization of signals generated by the panels. Panels signals and events can easily be browsed using the two front browsing keys. Some special events, or operating status, are also signalled by a buzzer installed inside the repeaters.

Repeaters are wired to panels using shielded cable (up to 1000m distance) and RS485 data communication protocol; the communication line supports up to 15 devices to be selected from the following list:

FX/RP10 = Remote repeater with LED indicators and LCD display, low-profile metal housing.

FX/RP20 = Remote repeater with LED indicators and LCD display, control keyboard, low-profile metal housing.

FX/SIN01 = Mimic panel for mimic systems realization; LED indicators are wired to the relevant terminal connections.

The above devices support up to 15 FX/AL01 power supply units with the following features:

FX/AL01 = Intelligent supervised fast-switching power supply unit compliant with EN54-4 standard with operating data detection device, data digitization and data transmission to main panel over serial line.

All devices are equipped with a dispwitch for ID addresses setup to ensure the correct communication among the devices connected over the serial line.

All devices also feature galvanic separation to ensure transient immunity.

2. FEATURES

2.1 Electrical Features

Power supply:	DC24V from panels or remote power unit.
Consumption @DC24V:	50mA idle status, 62mA (90mA for FX/RP20) alarm mode.
LEDs and LCD display:	15 colour LED indicators for different signals, LCD display with browsing keys, buzzer excludable via jumper.
Wiring:	terminal board for power supply and serial line connection.
Cable type:	3 x 1,5 sq mm flameproof TWISTED shielded cable.

Repeaters shall be used as auxiliary device for compatible fire panels with CE mark and compliant with UNI-EN54 standard, part 2 and part 4.

2.2 Mechanical Features

Dimensions:	W 250 x H 201 x D 68 mm
Operating temp.:	+5 / +40 °C - 93 % UR.
Weight:	1,5 Kg
Parts supplied:	technical manual.

FX/RP10 repeater **FX/RP20 repeater**

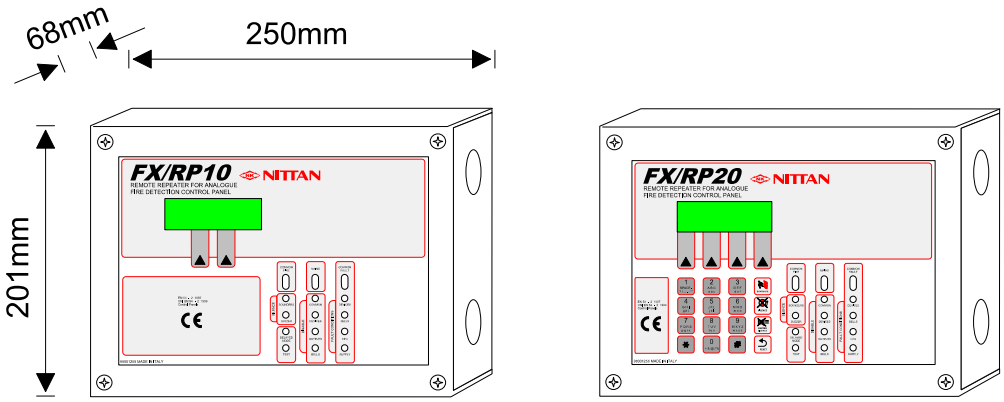

MEASUREMENT IN MILLIMETERS

3. REPEATERS WIRING

Internal overview.

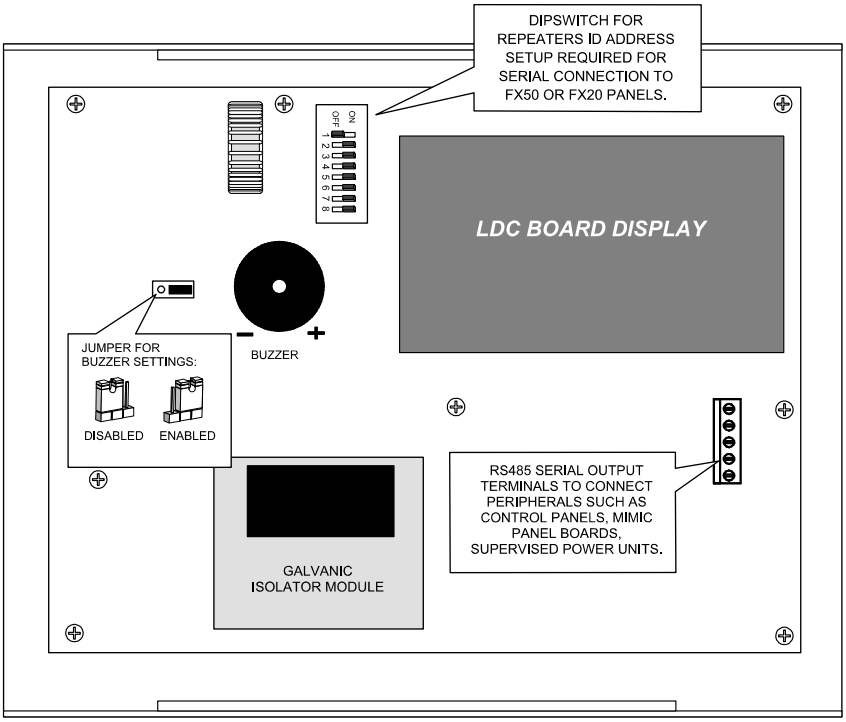

DIPswitch settings for ID addresses setup:

CODE #0 (ONLY FOR CONTROL PANEL)	CODE #1	CODE #2	CODE #3
CODE #4	CODE #5	CODE #6	CODE #7
CODE #8	CODE #9	CODE #10	CODE #11
CODE #12	CODE #13	CODE #14	CODE #15

FX/50 panel main board wiring diagram and repeaters power connection:

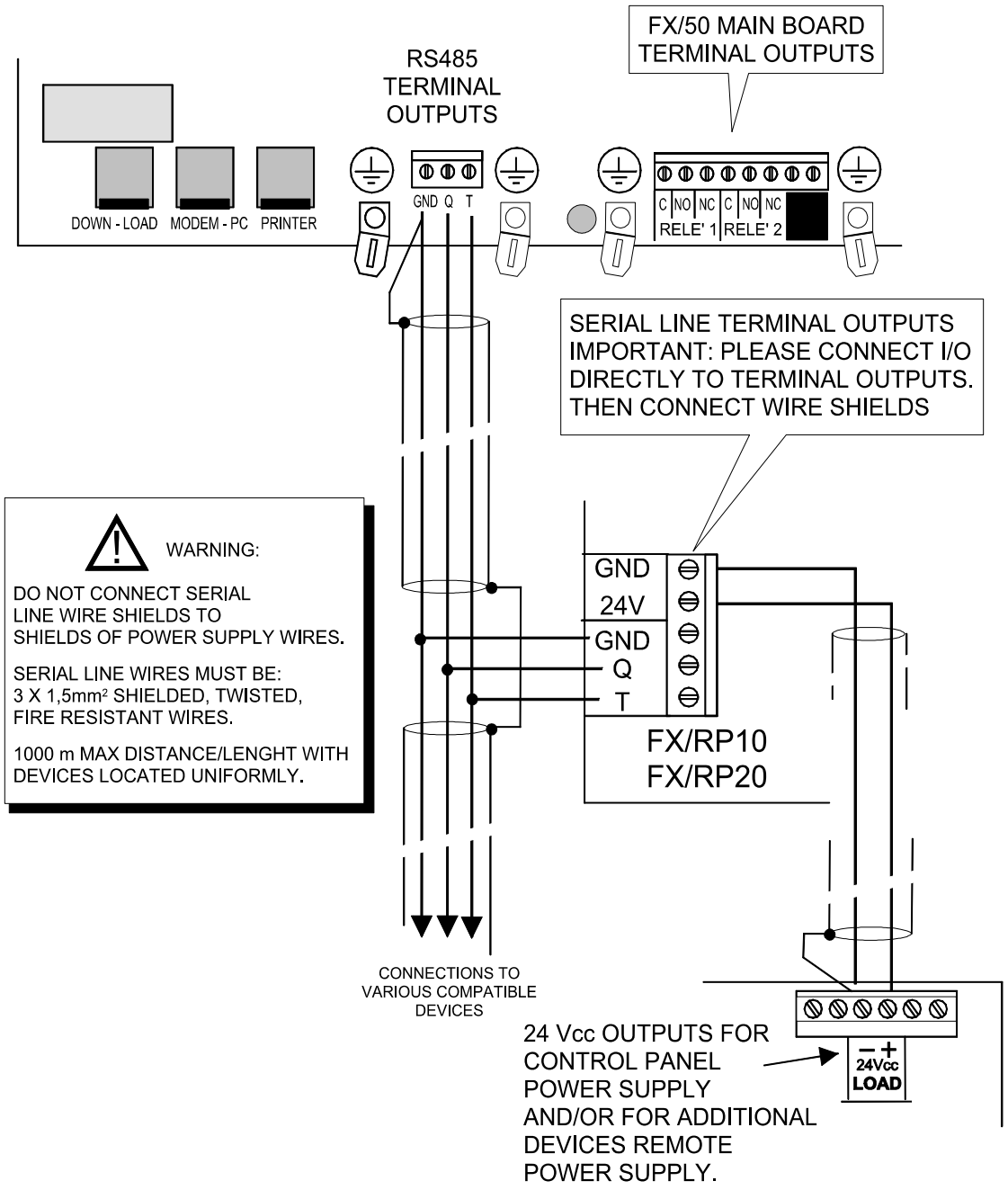

Wiring diagram to FX/20 panel over RS485 serial line:

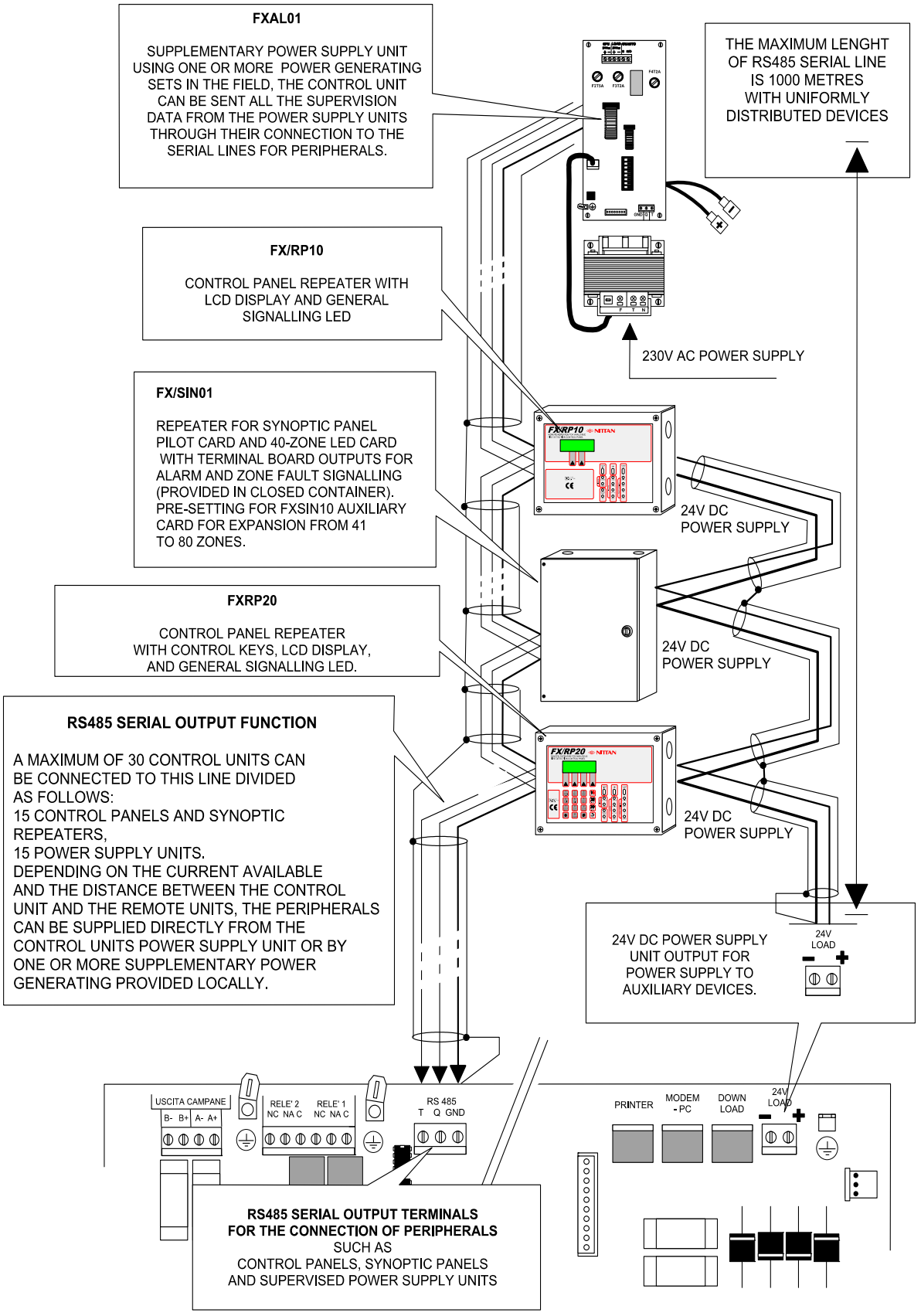

4. INSTALLATION AND SETUP GENERAL TABLE

NUMBER	MODEL	CODE SET	DISTANCE FROM PANEL (metres)	SYSTEM LOCATION	NOTES

5. DISPOSAL INSTRUCTIONS

Dispose of FX/RP10 and FX/RP20 repeaters in compliance with current city regulations. Leave the devices in a dumping ground authorized for the disposal of electronic products. If required, please contact the appropriate city office for additional information.

The materials used for this product are very harmful and polluting if dispersed in the environment.

6. CONTENTS

1. GENERALS - - - - - 3
2. FEATURES - - - - - 3
2.1. Electrical Features - - - - - 3
2.2. Mechanical Features - - - - - 3
3. REPEATERS WIRING - - - - - 4
4. INSTALLATION AND SETUP GENERAL TABLE - - - - - 7
5. DISPOSAL INSTRUCTIONS - - - - - 8
6. CONTENTS - - - - - 8

Product specifications as described above do not bind the manufacturer and may be altered without prior notice.

NITTAN ELECTRONIC COMPANY LIMITED 11-6,1-CHOME, HATAGAYA, SHIBUYA-KU 151-8535 TOKYO - JAPAN